КСХ-Хаджидимитров ЕООД София, ул. Тракия 48 тел.: 02/ 943 45 34 www.obkov.com/e-mail: office@obkov.com

Modern OFFICE

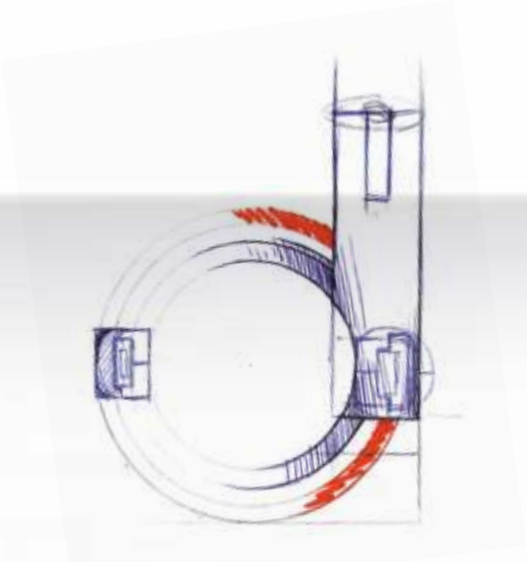

Колелата **Modern**, иновативни във всичко, от формата до конструкцията им, белязани от простотата, която характеризира всички велики изобретения.

Дупка, празно пространство около което се върти магически всичко, това е нишката на тази колекция колела, проектирани от Adriano design - Italy.

Възможност да откриете в детайли характеристиките, отличаващи тези продукти, имащи патенти за иновации, международни награди и сертификати.

Товароносимост 50 Kg.

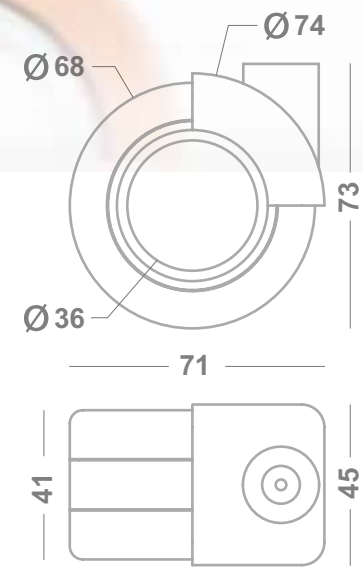

Цвят на тяло/гума: Цена на колело- 15,60лв. с ДДС

Код: 752-1669 Бяло/бяло със стопер
Код: 752-1629 Бяло/бяло
Код: 752-1665 Сиво/сиво със стопер
Код: 752-1625 Сиво/сиво
Код: 752-1670/081 Бяло/оранжево със стопер
Код: 752-1657/081 Черно/сиво със стопер

Вид на захващане: Цена - 1,20лв. с ДДС

Код: 752-81 Планка 35x35 мм
Код: 752-194 Шпилка м8x15 мм
Код: 752-195 Шпилка м10x15 мм

Височина на колелата според начина на захващане

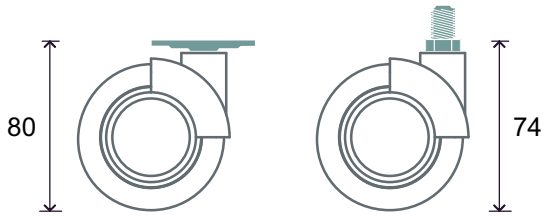

Цвят на тялото - материал: синтетичен полимер

черно Black | бяло White | алуминий Aluminium | сиво Grey

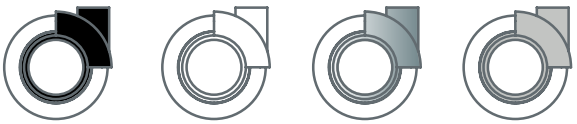

Цвят на гума и спирачка

Black | White | Grey | Orange

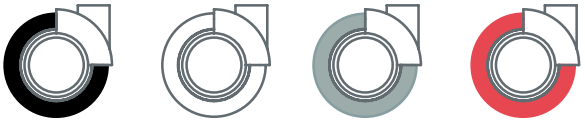

Начин на захващане

Шпилка
M8 X 15
M10 X 15

Планка
35 x 35

Modern FLAT1

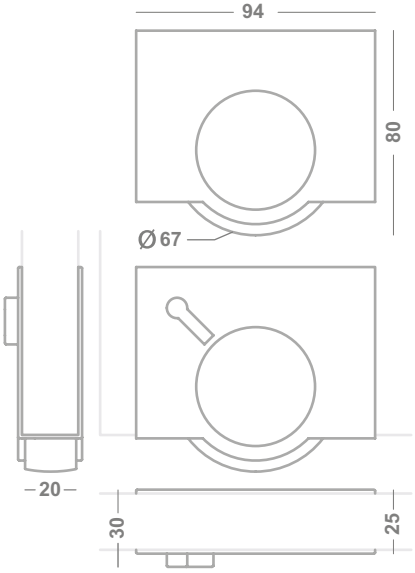

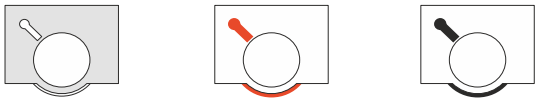

Начин на захващане

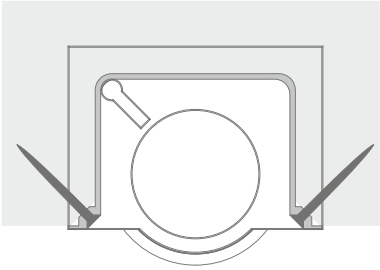

Товароносимост 80 Kg.
Материал - ZAMA
За панел 25мм

Код: 752-861/AL.OR Алуминий с оранжева гума
Код: 752-861/AL.BL Алуминий с черна гума
Колело Modern Flat 1 - 23,50лв. с ДДС

Modern FLAT2

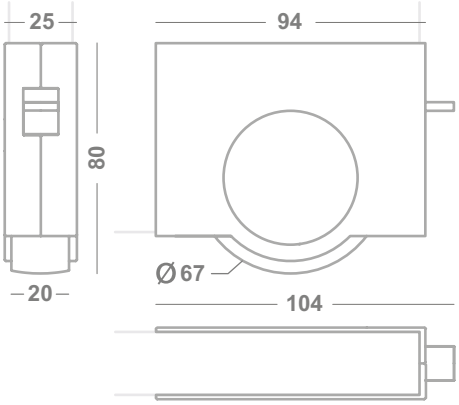

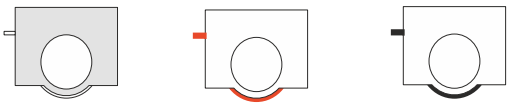

Начин на захващане

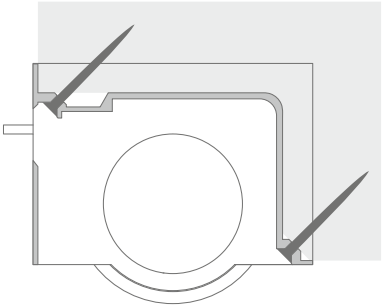

Товароносимост 80 Kg.
Материал - ZAMA
За панел 25мм

Код: 752-871/AL.OR Алуминий с оранжева гума
Код: 752-871/AL.BL Алуминий с черна гума
Колело Modern Flat 2 - 25,90лв. с ДДС

КСХ-Хаджидимитров ЕООД София, ул. Тракия 48 тел.: 02/ 943 45 34 www.obkov.com /e-mail: office@obkov.com

TWIN WHEEL CASTOR W/TOP PLATE

Material: Wheel: Polyamid (PA), black.
Top plate: 2 mm steel, bright zinc plated.

Application: Premounted top plate 42 x 42 mm or 38 x 38 mm.

With or without brake.

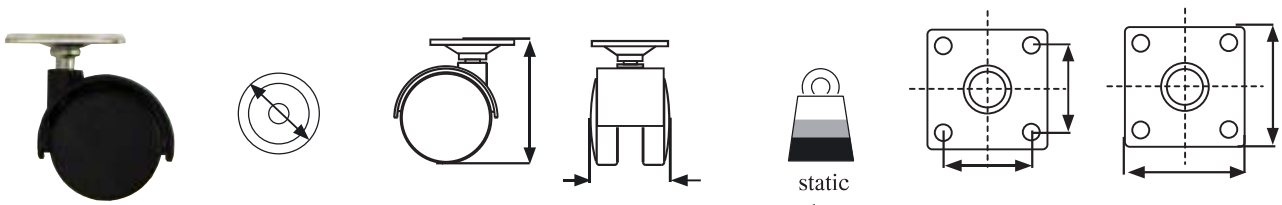

No brake	mm	mm	mm	static kg	mm	mm
# 08.04.003 - 0,88 лв	30	43	32	15	25 x 25	38 x 38 x 2
GTV 08.04.029 - 0,95 лв	40	56	41	25	25 x 25	38 x 38 x 2
GTV 08.04.097 - 1,20 лв	50	64	47	30	25 x 25	38 x 38 x 2

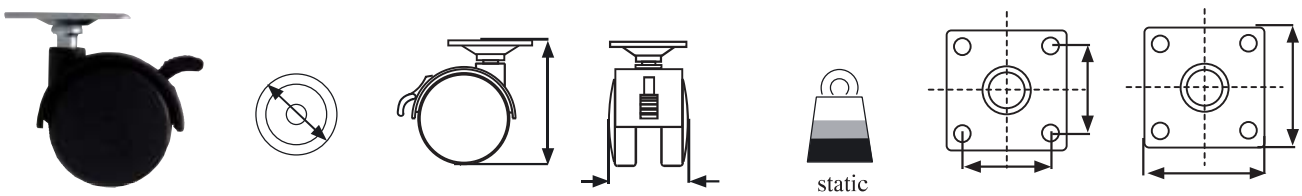

With brake	mm	mm	mm	static kg	mm	mm
# 08.04.005	30	43	32	15	25 x 25	38 x 38 x 2
GTV 08.04.028 - 1,08 лв	40	56	41	25	25 x 25	38 x 38 x 2
GTV 08.04.096 - 1,40 лв	50	64	47	30	25 x 25	38 x 38 x 2

КСХ-Хаджидимитров ЕООД София, ул. Тракия 48 тел.: 02/ 943 45 34 www.obkov.com /e-mail: office@obkov.com

TWIN WHEEL CASTOR W/THREADED STEM

Material: Wheel: Polyamid (PA), black.
Threaded stem: Steel, bright zinc plated.

Application: Premounted threaded stem in M8 & M10.

With or without brake.

No brake	mm	mm	mm	static kg	mm	M
# 08.04.031 - 1,00 лв	40	51	37	25	15	8
# 08.04.105 - 1,10 лв	50	60	45	30	15	8
# 08.04.116	50	60	45	30	15	10
# 08.04.119	50	60	45	30	20	10

With brake	mm	mm	mm	static kg	mm	M
# 08.04.030 - 1,20 лв	40	51	37	25	15	8
# 08.04.110 - 1,45 лв	50	60	45	30	15	8
# 08.04.118	50	60	45	30	15	10
# 08.04.121	50	60	45	30	20	10

КСХ-Хаджидимитров ЕООД София, ул. Тракия 48 тел.: 02/ 943 45 34 www.obkov.com /e-mail: office@obkov.com

TWIN WHEEL CASTOR W/NYLON SOCKET

Material:	Wheel:	Polyamid (PA), black.
	Socket:	Polyamid (PA), black.
Application:	Knock-in socket Ø10,5 x 30mm (not premounted).	
	Knock-in hole depth 33 mm	
	With or without brake.	

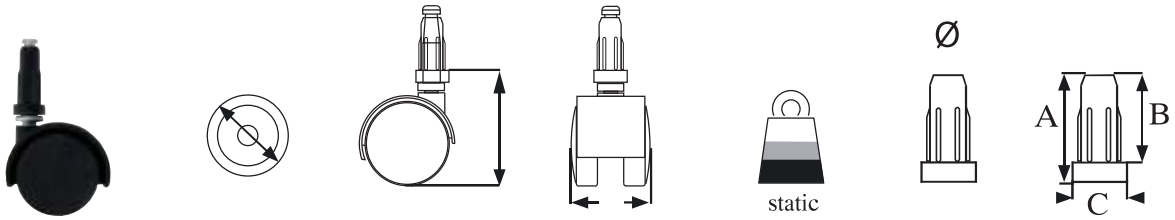

No brake	mm	mm	mm	static kg	mm	A mm	B mm	C mm
# 08.04.015	40	56	38	25	10,5	33	30	15,5
# 08.04.017 - 1,25 лв	50	65	47	30	10,5	33	30	15,5

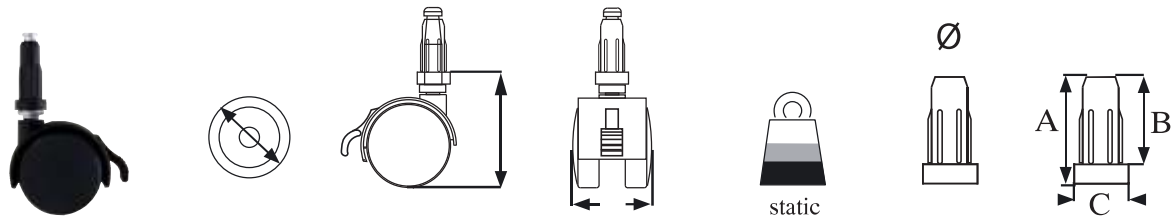

With brake	mm	mm	mm	static kg	mm	A mm	B mm	C mm
# 08.04.013	40	56	38	25	10,5	33	30	15,5
# 08.04.018	50	65	47	30	10,5	33	30	15,5

TWIN WHEEL CASTOR "LECCO"
W/PU TRACK - Ø 50 MM

Material: Wheel hood & core: Polyamid (PA), black.
Wheel track: Polyurethane (PU), grey.
Top plate: 2 mm steel, bright zinc plated.

Application: Premounted top plate 42 x 42 mm.
Hole distance (c/c.) : 32 mm, Ø5 mm screw holes.
Recommended for hard surface.
Without brake.

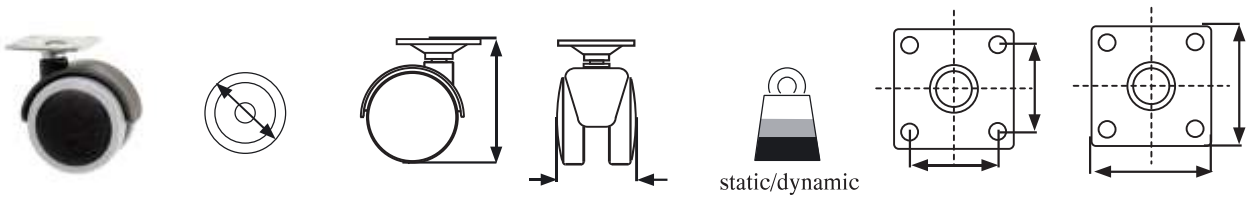

	mm	mm	mm	static/dynamic kg	mm	mm
# 08.04.099 - 3,95 лв	50	65	45	50/30	32 x 32	42 x 42 x 2

TWIN WHEEL CASTOR "BARI"
W/PU TRACK - Ø 65 MM

Material: Wheel hood & core: Polypropylene (PP), grey.
Wheel track: Polyurethane (PU), black.
Top plate: 2 mm steel, bright zinc plated.

Application: Premounted top plate 42 x 42 mm.
Hole distance (c/c.) : 32 mm, Ø5 mm screw holes.
Recommended for hard surface.
With or without brake.

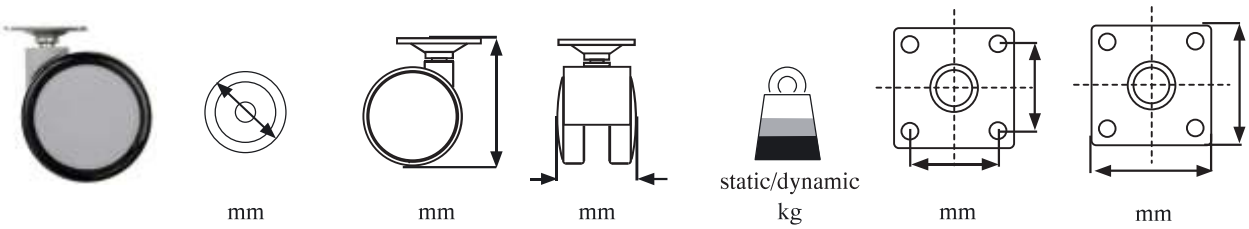

	mm	mm	mm	static/dynamic kg	mm	mm
# 08.04.200 - 6,25 лв	65	78	45	80/50	32 x 32	42 x 42 x 2

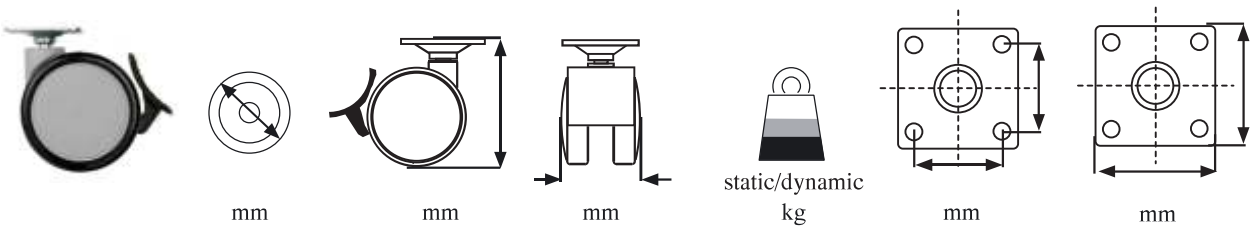

	mm	mm	mm	static/dynamic kg	mm	mm
# 08.04.201 - 7,25 лв	65	78	45	80/50	32 x 32	42 x 42 x 2

КСХ-Хаджидимитров ЕООД София, ул. Тракия 48 тел.: 02/ 943 45 34 www.obkov.com /e-mail: office@obkov.com

FORK CASTOR W/TOP PLATE & TRANSPARENT PU WHEEL

Material: Wheel track: Polyurethane (PU), transparent.
Wheel body: Polyurethane (PU), transparent.
Top plate: 1,8 mm steel, zinc plated.

Application: With premounted top plate 50 x 50 mm.
Recommended for hard surface.
With or without plastic brake.

No brake

mm

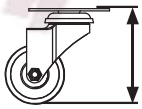

mm

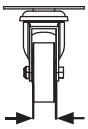

mm

static
kg

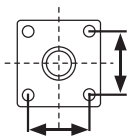

mm

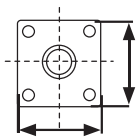

mm

GTV 08.12.290 - 4,95 лв	35	51	20	25	38 x 38	50 x 50 x 1,8
GTV 08.12.300 - 6,75 лв	50	65	20	50	38 x 38	50 x 50 x 1,8
# 08.12.310 - 10,70 лв	75	90	23	70	38 x 38	50 x 50 x 1,8

With brake

mm

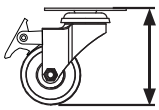

mm

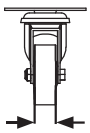

mm

static
kg

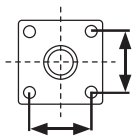

mm

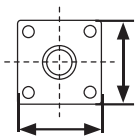

mm

GTV 08.12.291 - 5,95 лв	35	51	20	25	38 x 38	50 x 50 x 1,8
GTV 08.12.301 - 8,75 лв	50	65	20	50	38 x 38	50 x 50 x 1,8
# 08.12.311 - 12,15 лв	75	90	23	70	38 x 38	50 x 50 x 1,8

Transparent Orange

Ø50 mm # 08.12.308 - 6,75 лв
Ø75 mm # 08.12.318

Transparent Orange with brake

Ø50 mm # 08.12.309 - 8,75 лв
Ø75 mm # 08.12.319

Transparent Black

Ø35 mm 08.12#292 - 6,75 лв
Ø50 mm 08.12#302
Ø75 mm 08.12#312

Transparent Black with brake

Ø35 mm # 08.12.293 - 8,75 лв
Ø50 mm # 08.12.303
Ø75 mm # 08.12.313

Transparent Green

Ø50 mm # 08.12.306 - 6,75 лв
Ø75 mm # 08.12.316

Transparent Green with brake

Ø50 mm # 08.12.307 - 8,75 лв
Ø75 mm # 08.12.317

Transparent Blue

Ø50 mm # 08.12.304 - 6,75 лв
Ø75 mm # 08.12.314

Transparent Blue with brake

Ø50 mm # 08.12.305 - 8,75 лв
Ø75 mm # 08.12.315

КСХ-Хаджидимитров ЕООД София, ул. Тракия 48 тел.: 02/ 943 45 34 www.obkov.com /e-mail: office@obkov.com

FORK CASTOR "JAC" Ø50 & Ø75 MM

Material:

Wheel track: Polyurethane (PU), Black ring
Wheel body: Bright Anodized Aluminum
Fork: Chrome Pl. Steel Fork
Top plate: 2 mm steel, zinc plated.

Application: With premounted top plate 42 x 42 mm or 60 x 60 mm.
Recommended for hard surface.
With or without plastic brake.

No brake

	Colour of wheel track	mm	mm	mm	static kg	mm	mm
# 08.12.350	Black PU	50	65	20	40	32 x 32	42 x 42 x 2
# 08.12.355	Black PU	75	98	24	50	44 x 44	60 x 60 x 2

With brake

	Colour of wheel track	mm	mm	mm	static kg	mm	mm
# 08.12.351	Black PU	50	65	20	40	32 x 32	42 x 42 x 2
# 08.12.356	Black PU	75	98	24	50	44 x 44	60 x 60 x 2

КСХ-Хаджидимитров ЕООД София, ул. Тракия 48 тел.: 02/ 943 45 34 www.obkov.com /e-mail: office@obkov.com

FORK CASTOR “BOB” Ø50 & Ø75 MM

Material:

Wheel track: Polyurethane (PU), Black ring
Wheel body: Matt Anodized Aluminum
Fork: Alu finish, Steel Fork
Top plate: 2 mm steel, zinc plated.

Application: With premounted top plate 42 x 42 mm or 60 x 60 mm.
Recommended for hard surface.
With or without plastic brake.

No brake

	Colour of wheel track	mm	mm	mm	static kg	mm	mm
# 08.12.360	Black PU	50	65	20	40	32 x 32	42 x 42 x 2
# 08.12.365	Black PU	75	98	24	45	44 x 44	60 x 60 x 2

With brake

	Colour of wheel track	mm	mm	mm	static kg	mm	mm
# 08.12.361	Black PU	50	65	20	40	32 x 32	42 x 42 x 2
# 08.12.366	Black PU	75	98	24	45	44 x 44	60 x 60 x 2

КСХ-Хаджидимитров ЕООД София, ул. Тракия 48 тел.: 02/ 943 45 34 www.obkov.com /e-mail: office@obkov.com

FORK CASTOR "KIKA" Ø50 & Ø75 MM

Material:

Wheel track:	Polyurethane (PU), Black ring
Wheel body:	MattAnodized Aluminum
Fork:	Alu finish, Steel Fork
Top plate:	2 mm steel, zinc plated.

Application: With premounted top plate 42 x 42 mm or 60 x 60 mm.
Recommended for hard surface.
With or without plastic brake.

No brake

	Colour of wheel track	mm	mm	mm	static kg	mm	mm
# 08.12.370	Black PU	50	65	20	40	32 x 32	42 x 42 x 2
# 08.12.375	Black PU	75	98	24	45	44 x 44	60 x 60 x 2

With brake

	Colour of wheel track	mm	mm	mm	static kg	mm	mm
# 08.12.371	Black PU	50	65	20	40	32 x 32	42 x 42 x 2
# 08.12.376	Black PU	75	98	24	45	44 x 44	60 x 60 x 2

КСХ-Хаджидимитров ЕООД София, ул. Тракия 48 тел.: 02/ 943 45 34 www.obkov.com /e-mail: office@obkov.com

BOX CASTOR - SCREW-ON W/ PP WHEEL

Material:	Wheel:	Polypropylene (PP), white or black.
	Mounting bracket:	Steel, bright zinc plated.
Application:	Mouting bracket:	19 x 42 mm.
	Hole distance (c/c):	32 mm.

	Colour of wheel	mm	mm	mm	static kg	mm	mm
							A B
# 08.06.010 - 0,65 лв	White	25	27	13	25	32	18/40
# 08.06.027	Black	25	28	11	25	32	18/42
# 08.06.025	White	30	33	16	25	32	21/48

BOX CASTOR - W/ PU TRACK

Material:	Wheel track:	Polyurethane (PU), grey.
	Wheel core:	Polypropylene (PP), black (Blk).
	Mounting bracket:	Steel, bright zinc plated.
Application:	Mounting bracket:	19 x 42 mm or 20 x 58 mm.
	Hole distance (c/c):	32 mm or 46 mm
	Recommended for	hard surface

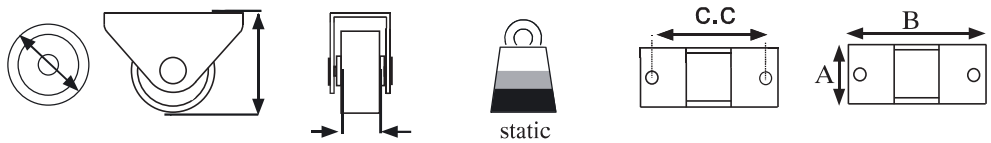

	Colour of wheel	mm	mm	mm	static kg	mm	mm A B
# 08.06.040 - 0,90 лв	Grey/Blk	25	28	13	25	32	19/42
# 08.06.042 - 1,44 лв	Grey/Blk	32	39	16	25	46	20/58
# 08.06.044 - 1,65 лв	Grey/Blk	40	43	16	25	46	20/58

BOX CASTOR - INLAY TYPE

Material:	Wheel:	Polyamid (PA), black.
	Mounting ring:	Steel, bright zinc plated.
Mounting ring:		Ø26 x 1,5 mm.
Hole distance(c/c):		20 mm.
Application:		Inlay type, ideal for table legs.

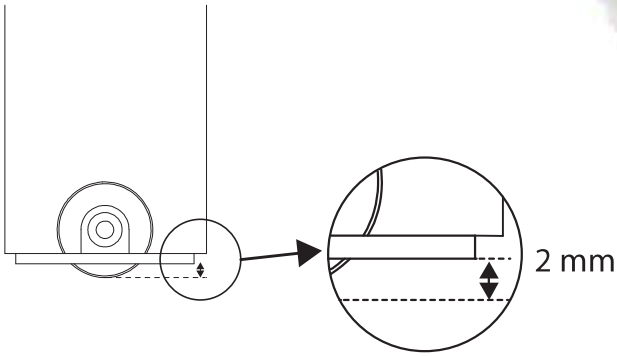

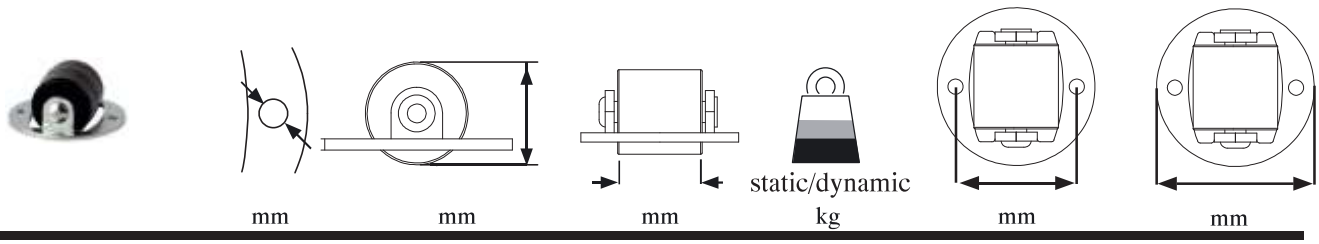

# 08.06.050 - 0,85 лв	Ø2,5	Ø14 mm	14 mm	30/15	20 mm	Ø26 mm

КСХ-Хаджидимитров ЕООД София, ул. Тракия 48 тел.: 02/ 943 45 34 www.obkov.com /e-mail: office@obkov.com

BRASS CASTOR
“BRASCELLA”

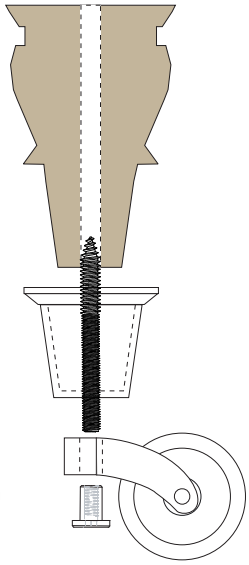

Material: Brass: Polished brass.

Application: Mounted by use of steel head F-593 12.09.890-0 & M8 hangerbolt.
To be bought separately.

		mm	mm	mm	static kg	Ø mm	Ø mm
UK	08.05.221 - 24,00 лв	32	65	19	50	39	31,5

КСХ-Хаджидимитров ЕООД София, ул. Тракия 48 тел.: 02/ 943 45 34 www.obkov.com /e-mail: office@obkov.com

FORK CASTOR “GARDA” - Ø76 MM

Material:	Wheel:	Polypropylene (PP), grey.
	Metal parts:	Steel, bright zinc pl.
Application:	Premounted top plate 42 x 42 mm. Hole distance (c/c.) : 32 mm, Ø5 mm screw holes. With or without brake.	

No brake	mm	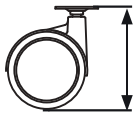 mm	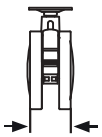 mm	static/dynamic kg	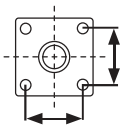 mm	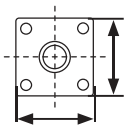 mm
# 08.12.400	76	100	47	50/25	32 x 32	42 x 42 x 1,5

With brake	mm	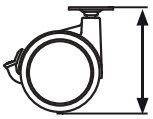 mm	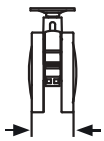 mm	static/dynamic kg	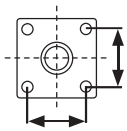 mm	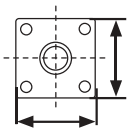 mm
# 08.12.405	76	100	47	50/25	32 x 32	42 x 42 x 1,5

КСХ-Хаджидимитров ЕООД София, ул. Тракия 48 тел.: 02/ 943 45 34 www.obkov.com /e-mail: office@obkov.com

STEEL FORK CASTOR W/TOP PLATE & RUBBER TRACK

Material: Wheel: Grey soft rubber.
Metal parts: Steel, bright zinc pl.

Application: Premounted top plate.
Recommended for hard surface.
With or without brake.

.

Fork castor without brake

Fork castor with brake

No brake	mm	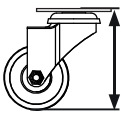 mm	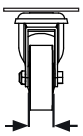 mm	static/dynamic kg	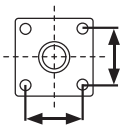 mm	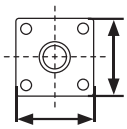 mm
# 08.12.161 - 3,85 лв	50	72	16	45/30	35 x 35	50 x 50 x 1,5
# 08.12.163 - 5,50 лв	75	100	21	60/45	45 x 45	65 x 65 x 2

With brake	mm	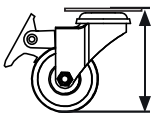 mm	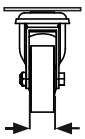 mm	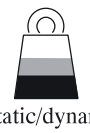 static/dynamic kg	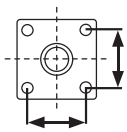 mm	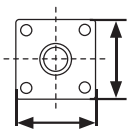 mm
# 08.12.162 - 4,68 лв	50	72	16	45/30	35 x 35	50 x 50 x 1,5
# 08.12.164	75	100	21	60/45	45 x 45	65 x 65 x 2

STEEL FORK CASTOR W/TOP PLATE & FULL BRAKE & RUBBER TRACK

Material: Wheel: Grey soft rubber.
Metal parts: Steel, bright zinc plated.

Application: Premounted top plate.
Recommended for hard surface.
With total brake which prevents as well swivelling as turning.

Fork castor with full brake

With brake	mm	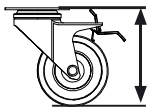 mm	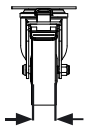 mm	static/dynamic kg	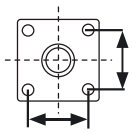 mm	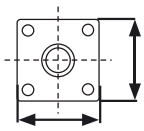 mm
# 08.12.167 - 6,85 лв	75	100	21	60/45	45 x 45	65 x 65 x 2

Brake system in action

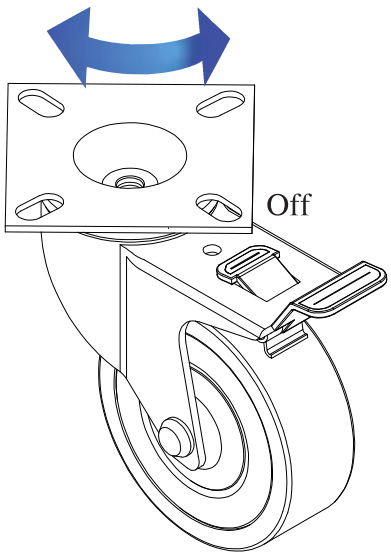

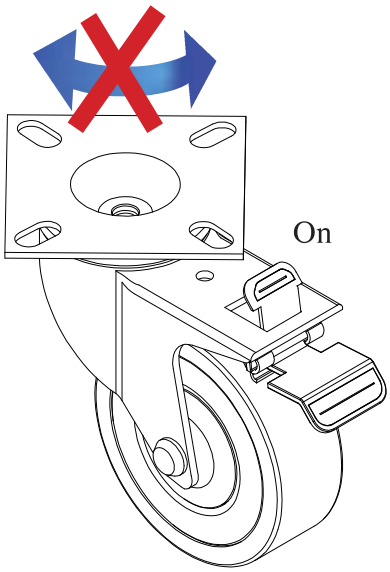

Off

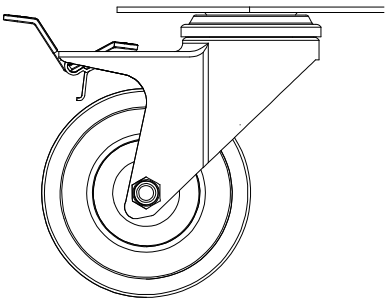

On

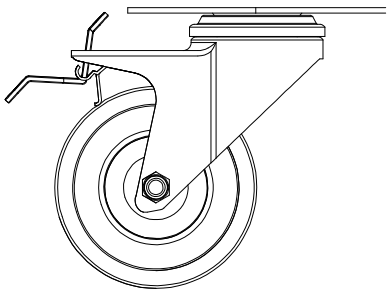

КСХ-Хаджидимитров ЕООД София, ул. Тракия 48 тел.: 02/ 943 45 34 www.obkov.com /e-mail: office@obkov.com

STEEL FORK CASTOR W/THREADED STEM & RUBBER TRACK

Material: Wheel: Grey soft rubber.
Metal parts: Steel, bright zinc plated.

Application: Premounted threaded stem in M10 x 30 mm.
Recommended for hard surface.
With or without brake.

Fork castor without brake

Fork castor with brake

No brake	mm	mm	mm	static/dynamic kg	M	mm
# 08.12.165	75	98	21	60/45	M10	30

With brake	mm	mm	mm	static/dynamic kg	M	mm
# 08.12.166	75	98	21	60/45	M10	30

КСХ-Хаджидимитров ЕООД София, ул. Тракия 48 тел.: 02/ 943 45 34 www.obkov.com /e-mail: office@obkov.com

STEEL FORK CASTOR
W/HOLE FOR BOLT & RUBBER TRACK

Material: Wheel: Grey soft rubber.
Metal parts: Steel, bright zinc plated.

Application: Hole for bolt.
Recommended for hard surface.
With or without brake.

Fork castor without brake

Fork castor with brake

No brake	mm	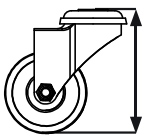 mm	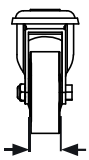 mm	static/dynamic kg	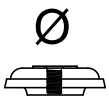 mm
# 08.12.168 - 4,05 лв	50	73	16	45/30	10,5
# 08.12.170 - 6,00 лв	75	100	21	60/45	10,5
# 08.12.205 - 11,50 лв	100	132	25	70/55	12,5

With brake	mm	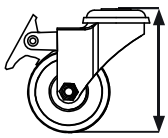 mm	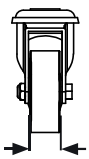 mm	static/dynamic kg	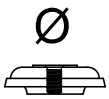 mm
# 08.12.169 - 5,05 лв	50	73	16	45/30	10,5
# 08.12.171 - 7,50 лв	75	100	21	60/45	10,5
# 08.12.206 - 13,50 лв	100	132	25	70/55	12,5

STEEL FORK CASTOR
W/FIXED PLATE & RUBBER TRACK

Material: Wheel: Grey soft rubber.
Metal parts: 1,5 mm steel, bright zinc plated.

Application: Premounted fixed top plate.
Recommended for hard surface.
Without brake.

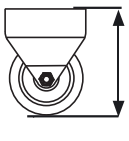

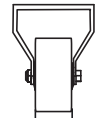

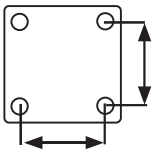

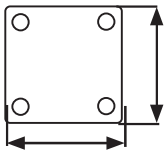

	mm	mm	mm	static/dynamic kg	mm	mm
# 08.12.150 - 2,95 лв	50	73	20	45/30	30 x 30	45 x 45 x 1,5

Good advice in order to obtain optimum and correct use of your castors:

Diameter & hardness:
Castors with large diameter roll easily and absorb possible shocks.
Castors with wide treads (tracks) spread the load and provide good floor protection.
Castors with hard tread (track) offer higher load capacity and roll easily.
Castors with soft tread (track) provide a cushioned ride and a quiet operation.
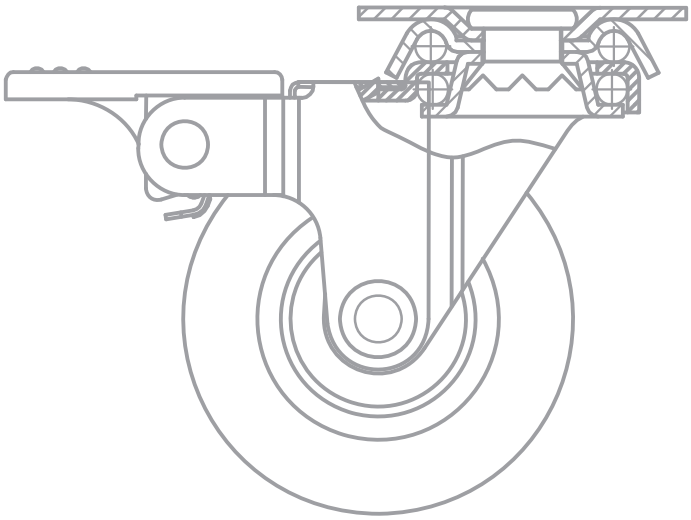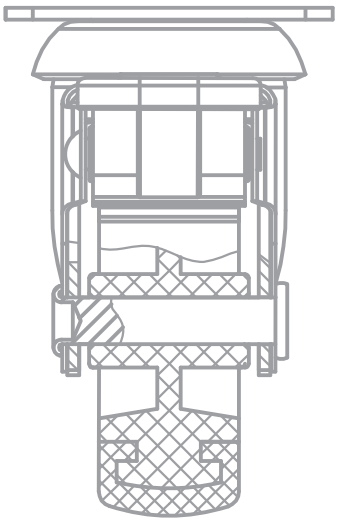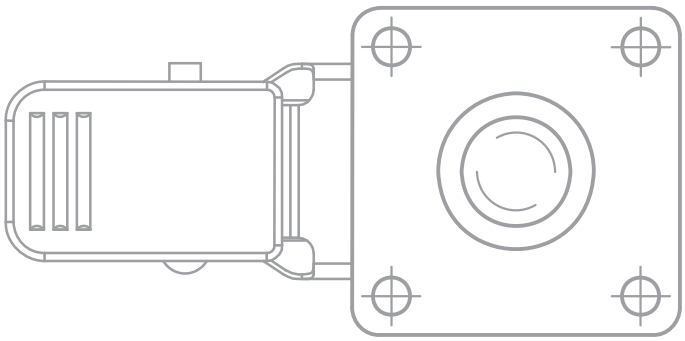
What to use where?
Castors with hard tread (track) are ideal for industrial locations with rough floors and steel grates.
Castors with soft tread (track) protect the floor and offer a quiet operation – though, less suited for use on carpets.